Sudesh Group

MAKE IN INDIA

APL APOLLO

SUN STEEL

STRENGTH FOREVER

ONE STOP ROOFING SOLUTION



SOLAR STRUCTURES

STRUTS

PLAIN CHANNEL PRE GALV GP/HDGI 41X41MM

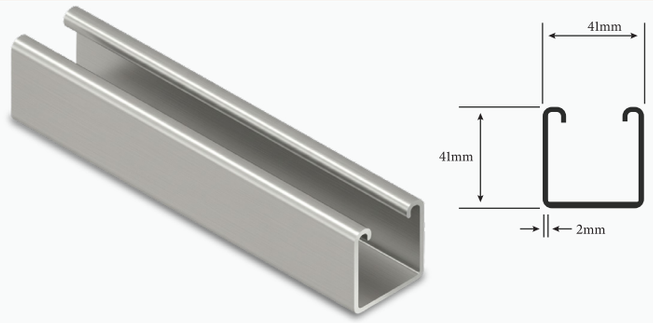

Material:
Hot Dip Galv (HDGI)/ Pre Galvanized/ Colour PPGI

Hole:
None

Available in:
Length- Minimum 3m

Also Available in:
Thickness- 1.6 - 2.5mm

SLOTTED CHANNEL PRE GALV GP/HDGI 41X41MM



Material:
Hot Dip Galv (HDGI)/ Pre Galvanized

Hole:
Customized

Available in:
Length- Minimum 3m

Also Available in:
Thickness- 1.6 - 2.5mm

PURLIN

C PURLIN 80X40X15MM/ 100X50X15MM/ 140X50X15MM

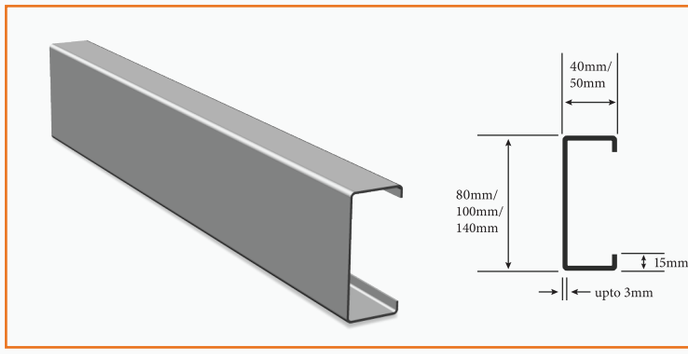

Material:
Hot Dip Galv (HDGI)/ Pre Galvanized/ Colour PPGI

Hole:
Customized

Available in:
Thickness- 1.6 - 2.5mm

Size range also available in,
Web: 60-180mm
Flange: 40-70mm
Lip: 10-20mm

HAT PURLIN 80X40X26X10MM

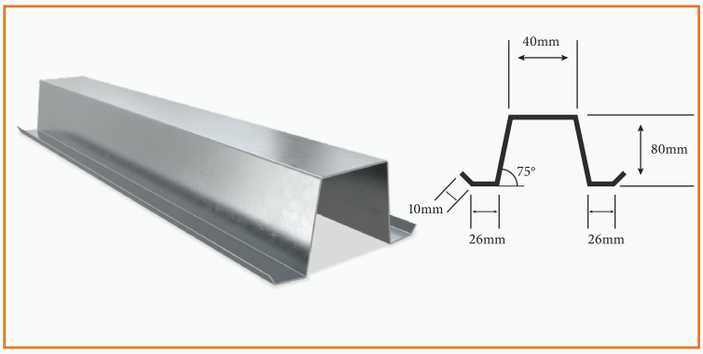

Material:
Galvalume

Hole:
Customized

Available in:
Thickness- 0.8 - 1.2 mm

INDUSTRIAL, WAREHOUSING & RESIDENTIAL PRODUCTS

ANGLE

PLAIN ANGLE GP/GI/MS 40X40MM

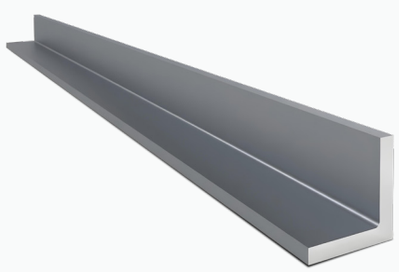

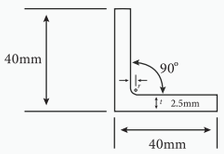

Material:
Hot Dip Galv (HDGI)/ Pre Galvanized/ MS

Hole:
None

Available in:
Width- Up to 40x40mm
Thickness- Up to 2.5mm
Length- Minimum 2m

SLOTTED ANGLE GP/GI/MS 40X40MM

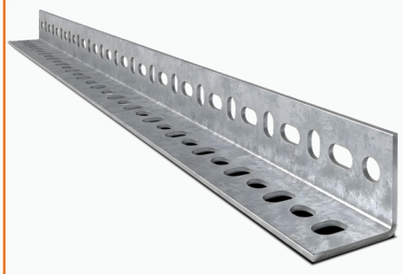

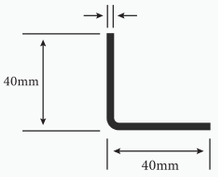

Material:
Hot Dip Galv (HDGI)/ Pre Galvanized/ MS

Hole:
Customized

Available in:
Width- Up to 40x40mm
Thickness- Upto 2.5mm
Length- Minimum 2m

CABLE TRAY

PERFORATED CABLE TRAY GP/GI

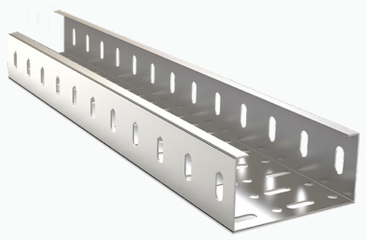

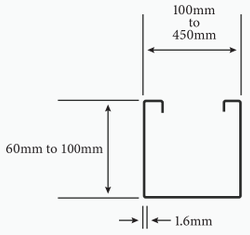

Material:
Pre Galvanized/Hot dip

Side Height :
50 to 100mm

Hole:
Customised

Available in:
Width- 100 to 450mm
Thickness- Upto 1.6mm
Length- 3000mm

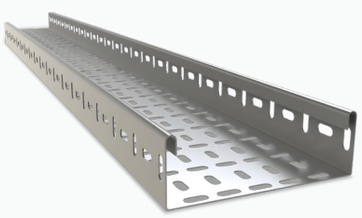

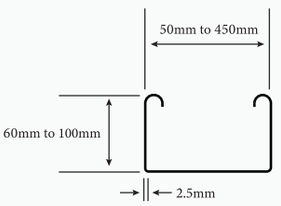

Material:
Pre Galvanized/Hot dip

Side Height :
50 to 100mm

Hole:
Customised

Available in:
Width- 50 to 450mm
Thickness- Upto 2.5mm
Length- 3000mm

WHY CHOOSE SUN STEEL RESIDENTIAL ROOFING?

- DURABILITY THAT LASTS
- PRECISION & QUALITY
- LIGHTWEIGHT YET STRONG
- EASE OF INSTALLATION
- SUSTAINABLE CHOICE

APPLICATIONS









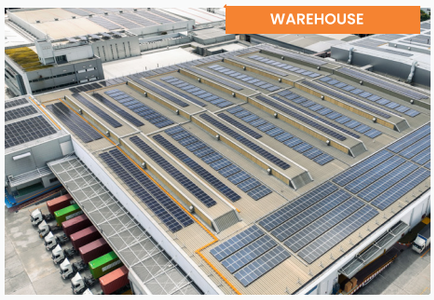



SG MART
ONE MART. INFINITE POSSIBILITIES

SCAN TO KNOW MORE

Corporate Office: SG Centre, 37C, Block A, Sector 132, Noida,
Uttar Pradesh 201304, India
T : +91-120 6918000
Email: sales@sgmart.co.in | **Website:** www.sgmart.co.in

Follow us on:

SUNSTEEL FLYER/FY26-27/JULY/QTY-3000